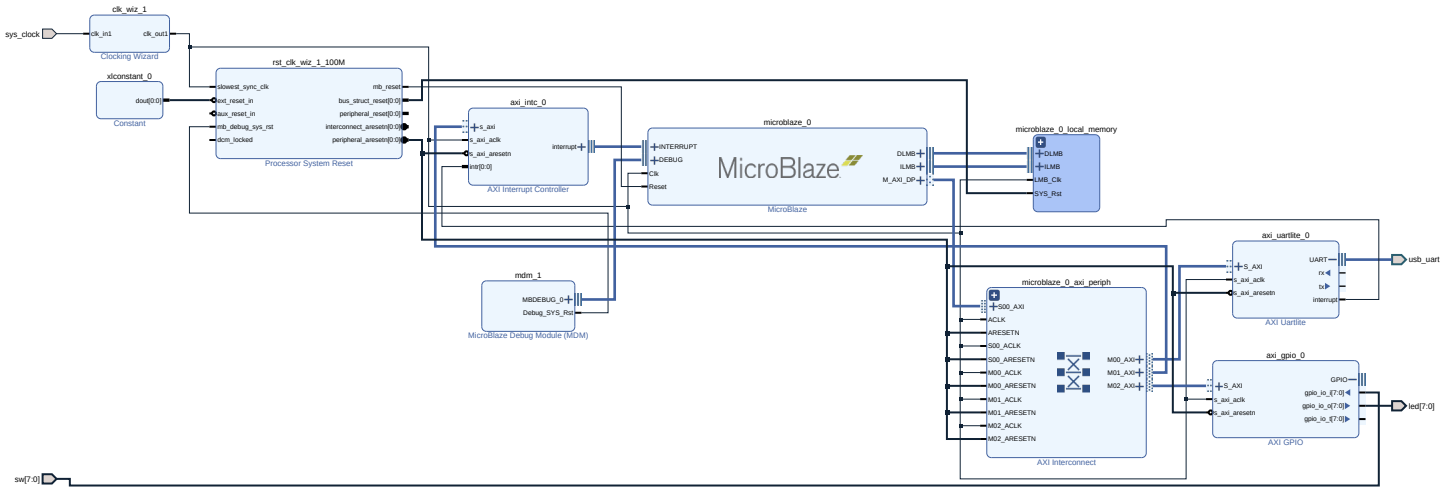
sys_clock
clk_wiz_1
clk_in1
clk_out1
Clocking Wizard
xlconstant_0
dout[0:0]
Constant
rst_clk_wiz_1_100M
slowest_sync_clk
ext_reset_in
aux_reset_in
mb_debug_sys_rst
dcm_locked
mb_reset
bus_struct_reset[0:0]
peripheral_reset[0:0]
interconnect_aresetn[0:0]
peripheral_aresetn[0:0]
Processor System Reset
axi_intc_0
s_axi
s_axi_aclk
s_axi_aresetn
irq[0:0]
interrupt
AXI Interrupt Controller
microblaze_0
INTERRUPT
DEBUG
Clk
Reset
DLMB
ILMB
M_AXI_DP
MicroBlaze
microblaze_0_local_memory
DLMB
ILMB
LMB_Clk
SYS_Rst
mdm_1
MBDEBUG_0
Debug_SYS_Rst
MicroBlaze Debug Module (MDM)
microblaze_0_axi_periph
S00_AXI
ACLK
ARESETN
S00_ACLK
S00_ARESETN
M00_ACLK
M00_ARESETN
M01_ACLK
M01_ARESETN
M02_ACLK
M02_ARESETN
M00_AXI
M01_AXI
M02_AXI
AXI Interconnect
axi_uartlite_0
S_AXI
s_axi_aclk
s_axi_aresetn
UART
rx
tx
interrupt
AXI Uartlite
usb_uart
axi_gpio_0
S_AXI
s_axi_aclk
s_axi_aresetn
GPIO
gpio_io_i[7:0]
gpio_io_o[7:0]
gpio_io_t[7:0]
AXI GPIO
led[7:0]
sw[7:0]